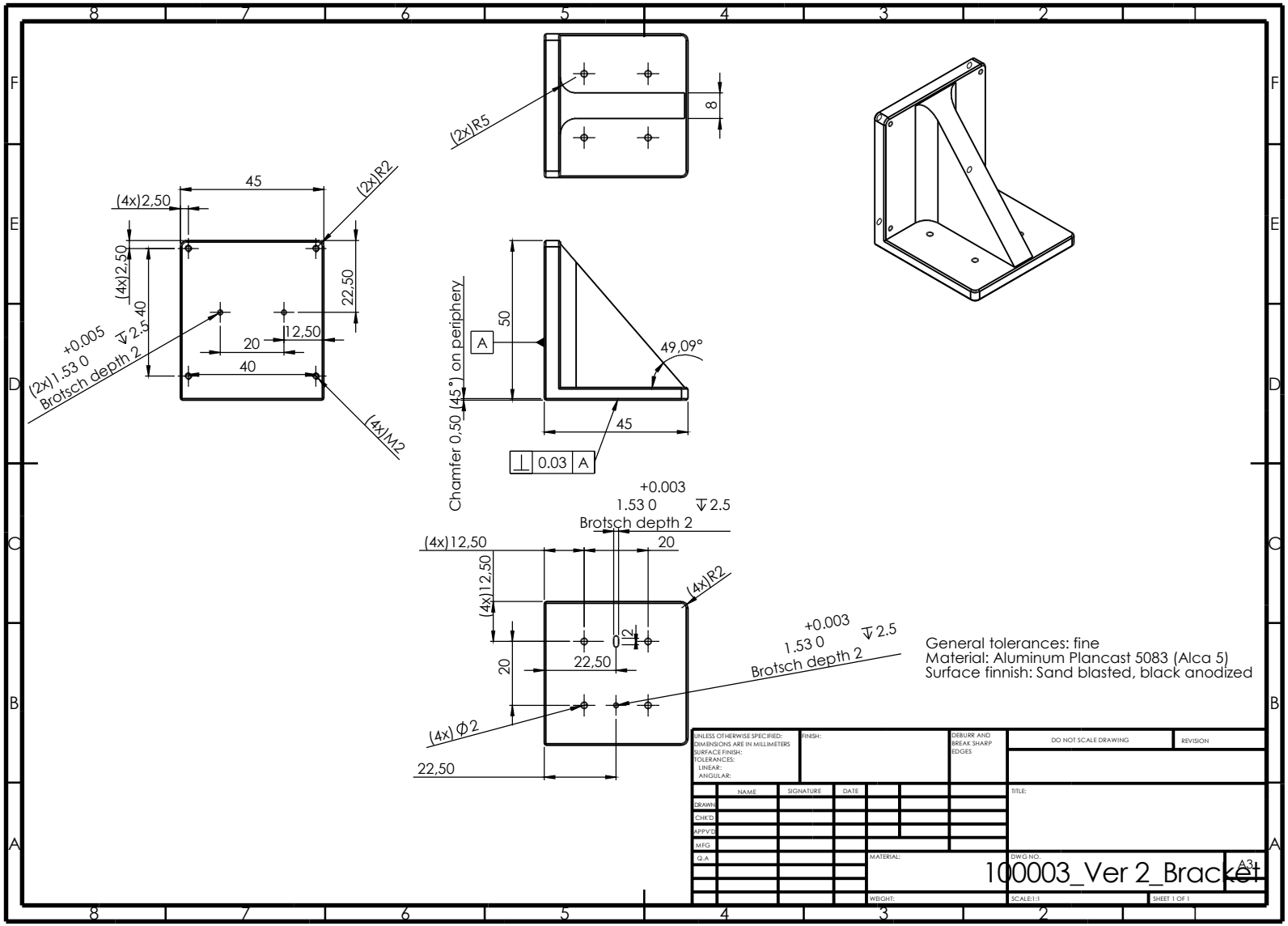
45
(4x)2,50
(2x)R2
(4x)2,50
22,50
40
12,50
20
40
(2x)1.53 +0.005 0
Brotsch depth 2
2.5
(4x)M2
(2x)R5
8
50
A
49,09°
Chamfer 0,50 (45°) on periphery
45
0.03 A
+0.003
1.53 0
2.5
Brotsch depth 2
(4x)12,50
20
(4x)12,50
(4x)R2
2
20
22,50
(4x) Ø2
22,50
+0.003
1.53 0
2.5
Brotsch depth 2
General tolerances: fine
Material: Aluminum Plancast 5083 (Alca 5)
Surface finnish: Sand blasted, black anodized
UNLESS OTHERWISE SPECIFIED:
DIMENSIONS ARE IN MILLIMETERS
SURFACE FINISH:
TOLERANCES:
LINEAR:
ANGULAR:
FINISH:
DEBURR AND BREAK SHARP EDGES
DO NOT SCALE DRAWING
REVISION
NAME
SIGNATURE
DATE
DRAWN
CHK'D
APPV'D
MFG
Q.A
TITLE:
MATERIAL:
DWG NO:
100003_Ver 2_Bracket
A3
WEIGHT:
SCALE:1:1
SHEET 1 OF 1